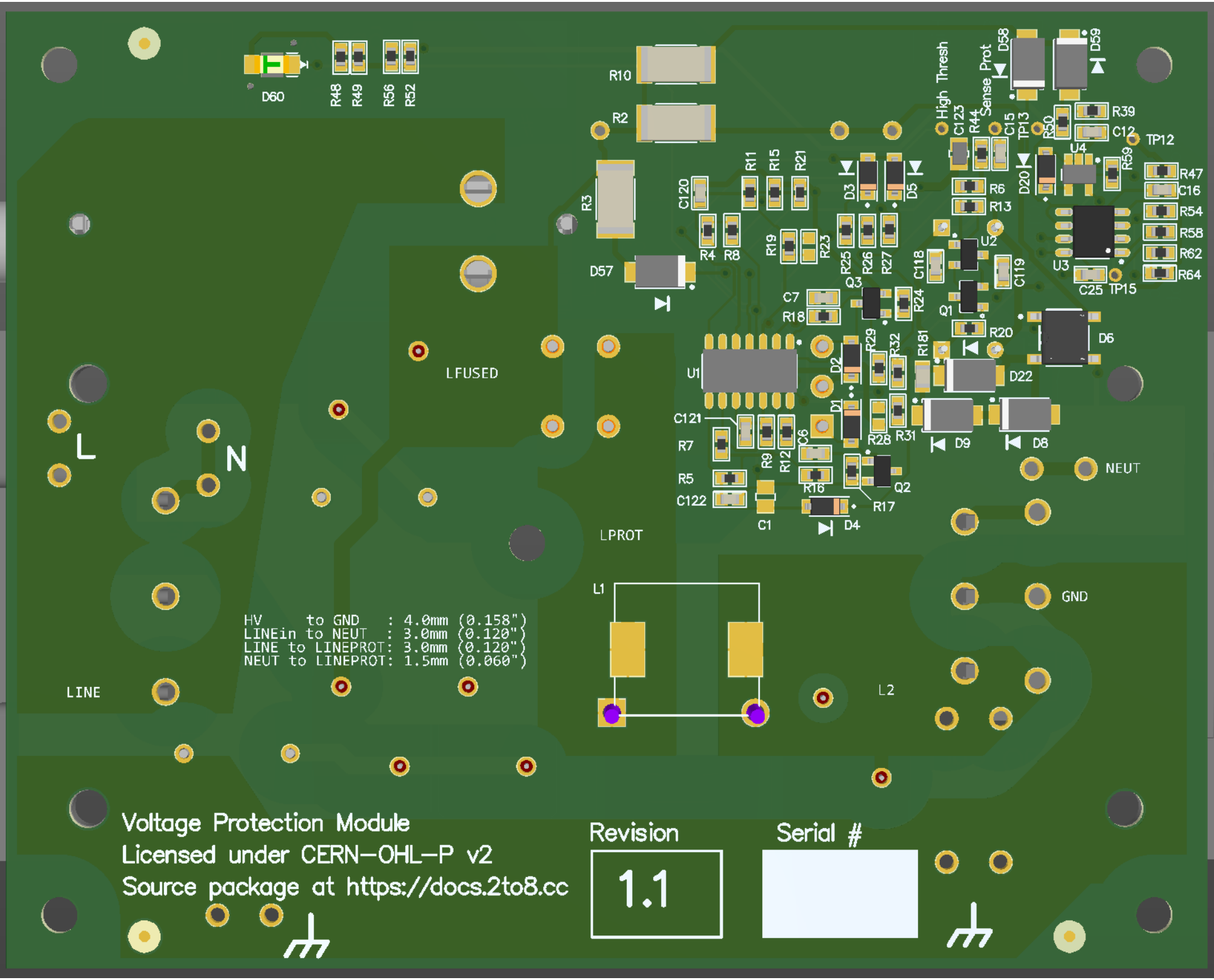
D60
R48
R49
R56
R52
R10
R2
R3
D57
C120
R4
R8
R11
R15
R21
R19
R23
D3
D5
R25
R26
R27
High Thresh
C123
R44
Sense Prot
C15
TP13
D58
D59
R50
R39
C12
TP12
U4
R59
D20
R6
R13
U2
C118
C119
U3
C25
TP15
R47
C16
R54
R58
R62
R64
C7
R18
Q3
R24
Q1
R20
D6
U1
D2
R29
R32
R181
D22
C121
R7
R9
R12
C6
D1
R28
R31
D9
D8
R5
C122
R16
Q2
R17
C1
D4
NEUT
LFUSED
L
N
LPROT
L1
GND
L2
LINE
HV to GND : 4.0mm (0.158")
LINEin to NEUT : 3.0mm (0.120")
LINE to LINEPROT: 3.0mm (0.120")
NEUT to LINEPROT: 1.5mm (0.060")
Voltage Protection Module
Licensed under CERN-OHL-P v2
Source package at https://docs.2to8.cc
Revision
1.1
Serial #

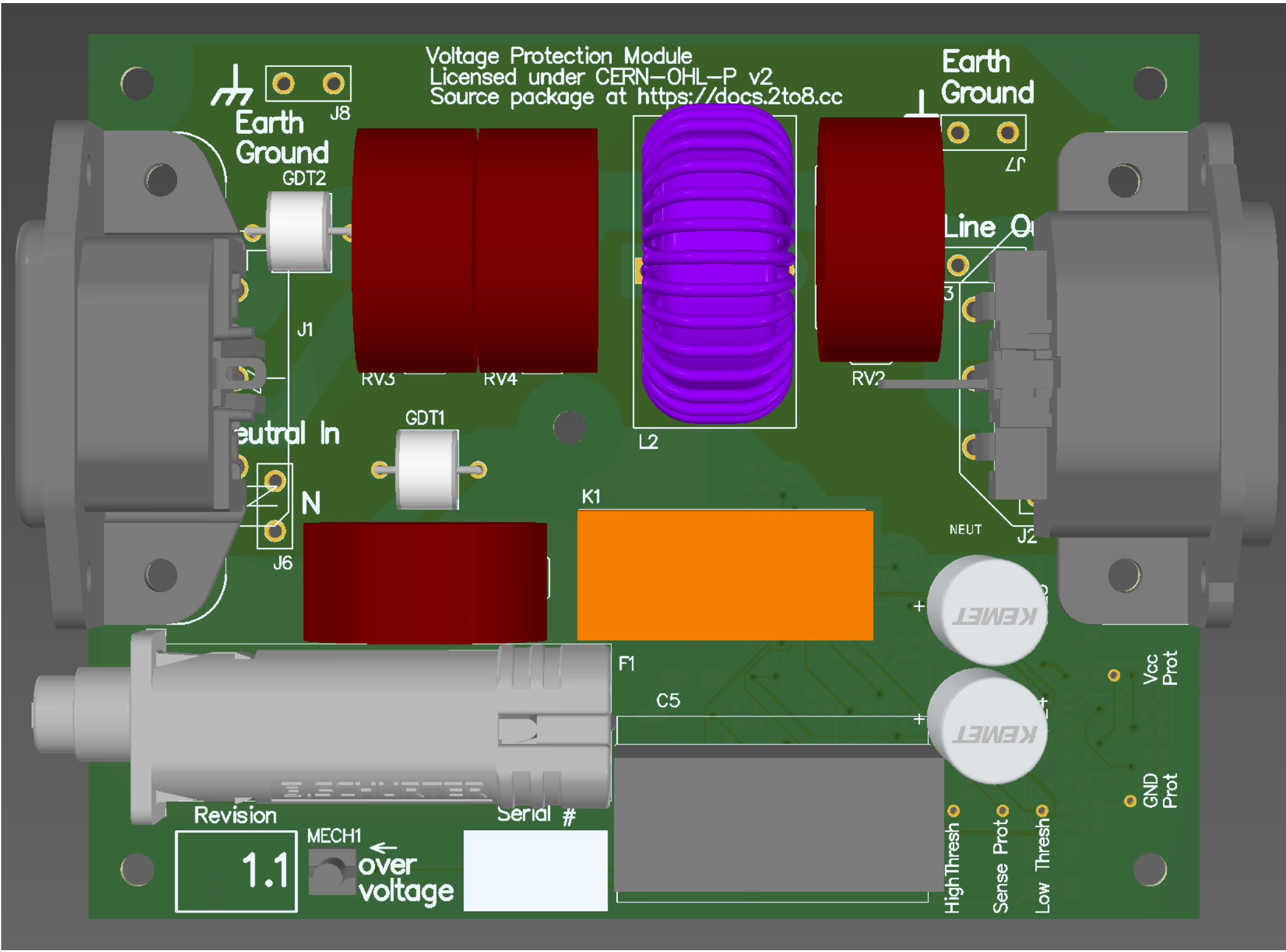
Voltage Protection Module
Licensed under CERN-OHL-P v2
Source package at https://docs.2to8.cc
Earth Ground
J8
Earth Ground
J7
GDT2
J1
RV3
RV4
L2
RV2
GDT1
K1
N
J6
NEUT
J2
F1
C5
Revision
1.1
MECH1
over voltage
Serial #
High Thresh
Sense Prot
Low Thresh
Vcc Prot
GND Prot

Top: All SMT
Red crosshatched are DNI.

Assembly Top (Scale 3:2)

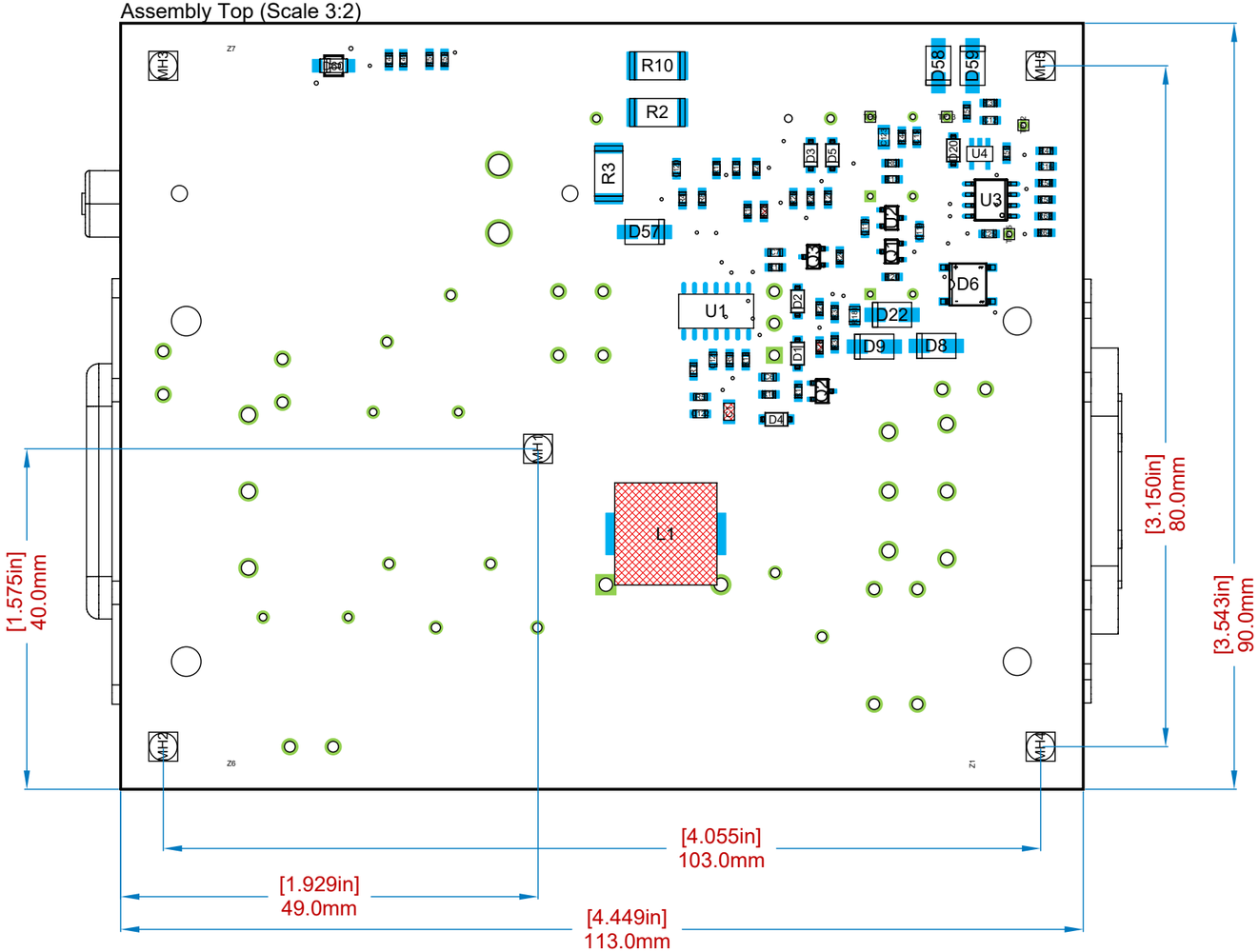

View from Front side (Scale 1:1)

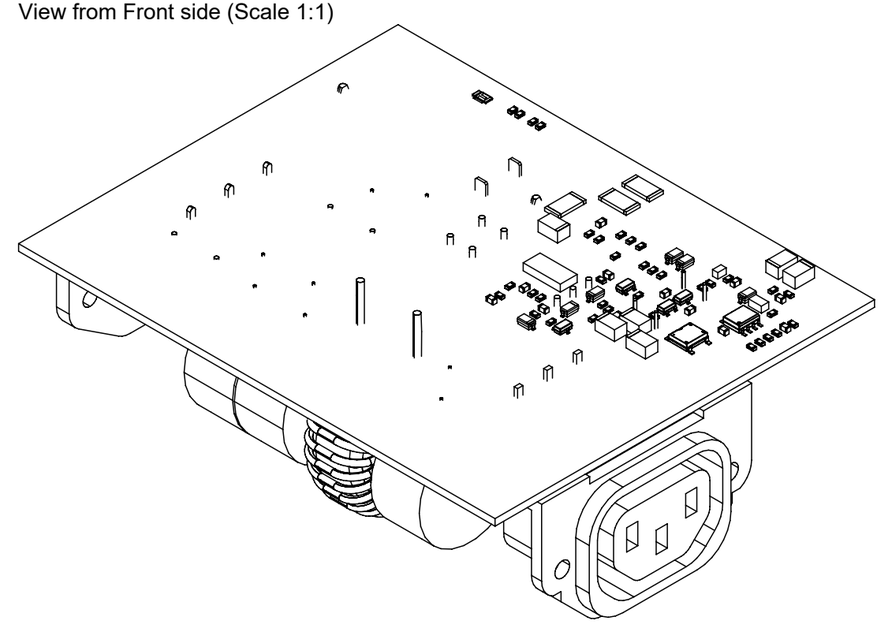

New Horizons

PROJECT
Protection Module

REV
1.1

Rod Hinman, Todd Lesher
808-989-0977
rhinman@nhgh.org
2025-05-24

Assembly Notes

Licensed under CERN-OHL-P v2
Source package at https://docs.2to8.cc

Bottom: All TH
Red crosshatched are DNI.

Assembly Bottom (Scale 3:2)

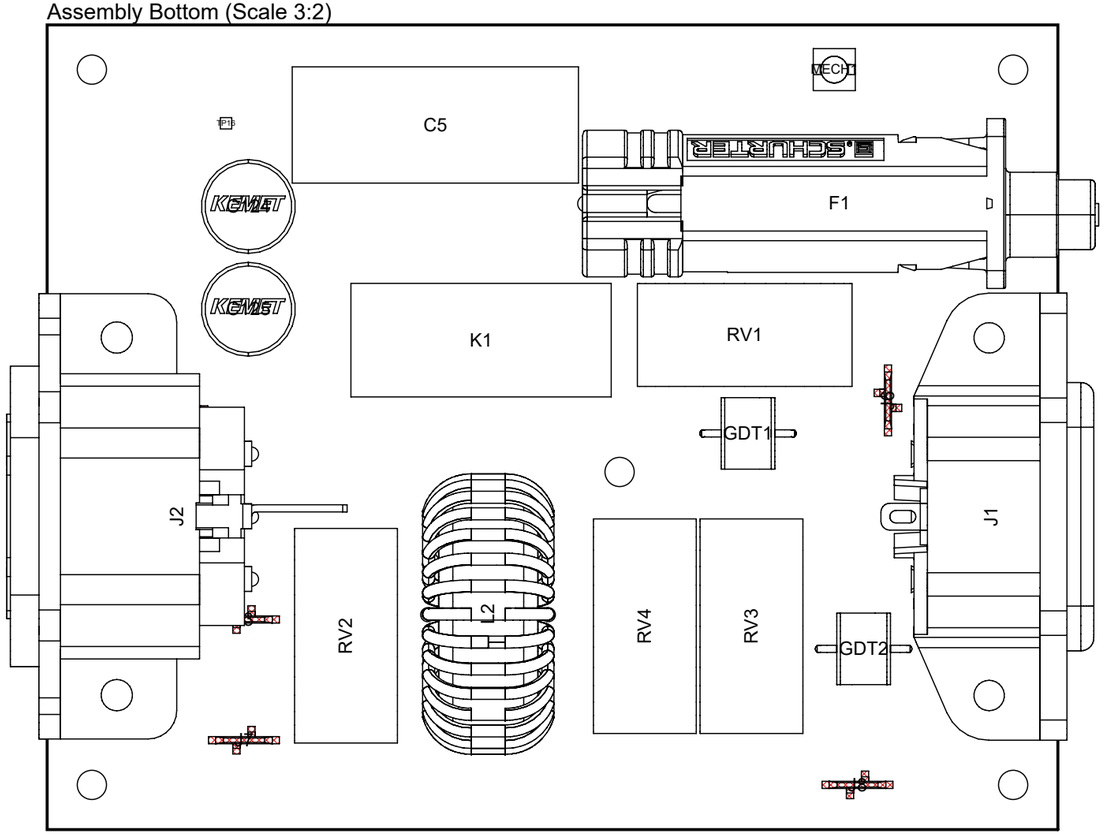

View from Back side (Scale 1:1)

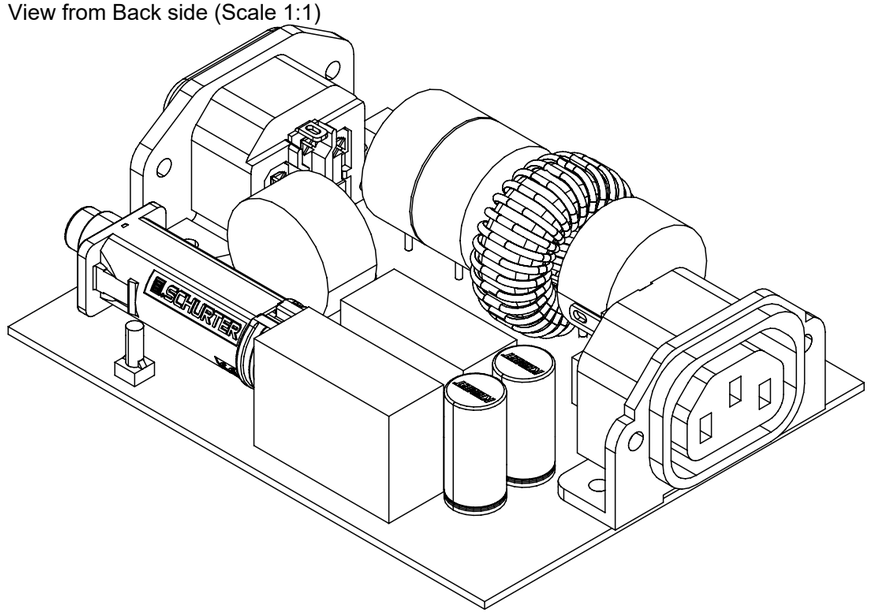

Licensed under CERN-OHL-P v2
Source package at https://docs.2to8.cc